特点Characteristic

1、触点负载能力高达60A
   Contact load capacity up to 60A
2、端子类型为插入式
   Terminal types as inserting
3、适用于汽车
   Suitable for automobile
4、外形尺寸（∅40×37.5）mm
   Overall dimensions（∅40×37.5）mm

触点参数Contact load

型号Model		WLVF3		
触点形式Contact form		1A(SPSTNO)	1B(SPSTNC)	1C(SPDT(B-M))
最大切换电流Maximum switching current		60A/40A		
最大切换电压Maximum switching voltage		75VDC		
最大切换功率Maximum switching power		840W/560W		
触点负载（阻性） Rated load (resistive)	60A	60A/14VDC	40A/14VDC	NO：60A/14VDC NC：40A/14VDC
	40A	40A/14VDC	30A/14VDC	NO：40A/14VDC NC：30A/14VDC

性能参数Performance parameter

触点材料Contact material		银合金 Ag alloy
接触电阻Contact resistance		Max 100mΩ
动作时间Action time		≤10ms
释放时间Release time		≤10ms
绝缘电阻Insulation resistance		Min 100MΩ（500VDC)
介质耐压 Dielectric Strength	断开触点间 Between contacts	AC 500VAC ,50Hz 1min
	线圈与触点间 Between contact coils	AC 750VAC ,50Hz 1min
抗冲击Shock resistance		147m/s^2 11ms
振动Vibration		10Hz~40Hz 1.5mm双振幅Double Amplitude
机械寿命Mechanical endurance min		1×10^{7}次
电气寿命Electrial eddurance min		1×10^{5}次
相对湿度Humidity		5%~85%RH
环境温度Ambient temperature		-40℃~125℃
重量Weight		约Approx 37g

订货示例Ordering example

	WLVF3	-S	-1	12	M	R	X
继电器型号 Type							
密封型式：F-防尘式，S-塑封式 Construction: F-Flux proofed ,S-Plastic Sealed							
继电器触点组数：1-1组触点 Number of Poles: 1-1 group							
线圈电压：6,12,24,48VDC Coil Voltage:6,12,24,48VDC							
触点形式：M-常开，无-转换，B-常闭 Contact Arrangement: M-N/O ,Nil-C/O ,B-N/C							
线圈瞬态抑制：R-带电阻，无-标准式，D-带二极管 Coil transient suppression: R-with resistance, Nil-stanard, D-with diode							
特规参数：根据客户要求定制 Special parameters: customized according to customer requirements							

线圈参数Coil parameters (at 20°C)

型号规格 Coil Voltage 额定 rated	型号规格 Coil Voltage 最大 Max	线圈电阻 Coil Resistance	动作电压 Pick-up Voltage 额定电压的65% 65% of rated voltage	释放电压 Drop-out Voltage 额定电压的10% 10% of rated voltage	功率 Coil Power
VDC		Ω±10%	VDC	VDC	W
6	7.8	22.5	3.9	0.6	1.6
12	15.6	90	7.8	1.2	
24	31.2	360	15.6	2.4	
48	62.4	1440	31..2	3.4	

外形及安装图 Outline and installation drawing

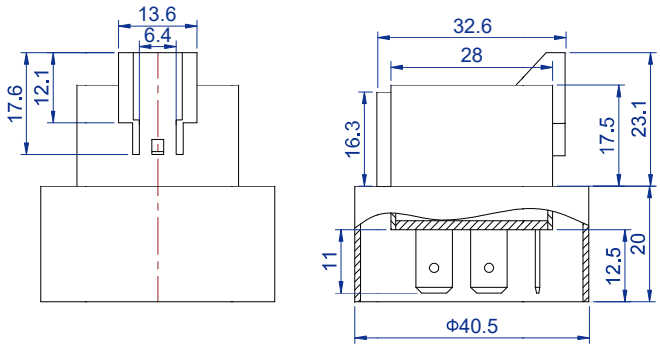

Outline Dimensions
外形图

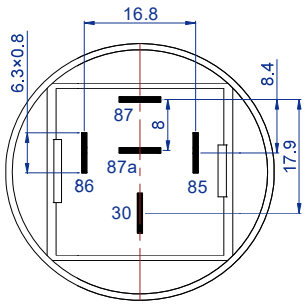

Mounting hole size (bottom view)
安装孔尺寸（底视图）

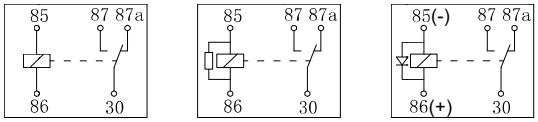

Coil: standard　Coil: with Resistance　Coil: with Diode

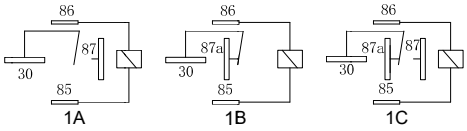

Wiring diagram (bottom view)
接线图（底视图）